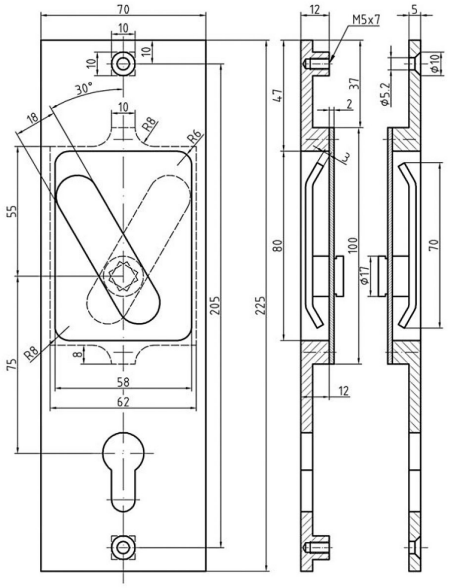

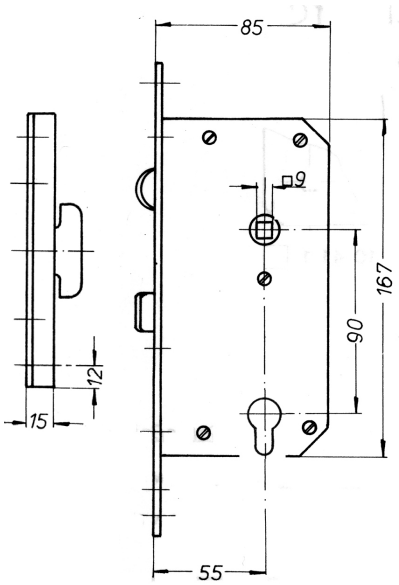

SET: 13.008Z Heavy duty Flush sliding door lock set for 1 3/4" thick doors. Chrome plated brass.

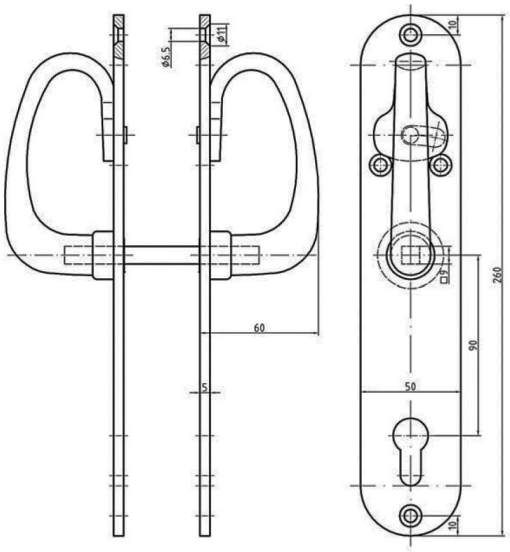

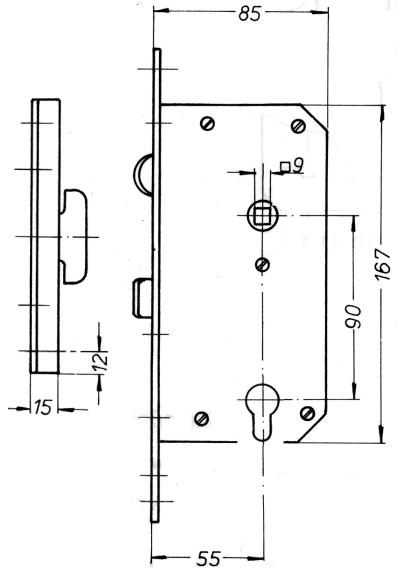

SET: 13.9698Z Heavy duty sliding door lock set for 1 1/2" thick doors. Chrome plated brass.

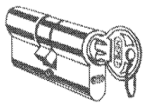

13.830 strike box 13.008 sliding lock 13.610Z flush trim set 13.969Z trim set

Keyways: see page 0-5